LEVICRON

NON-CONTACT PRECISION MOTION

ASD-Px/ ASd-PH63M (Work-holding & positioning/ HSK-C63)

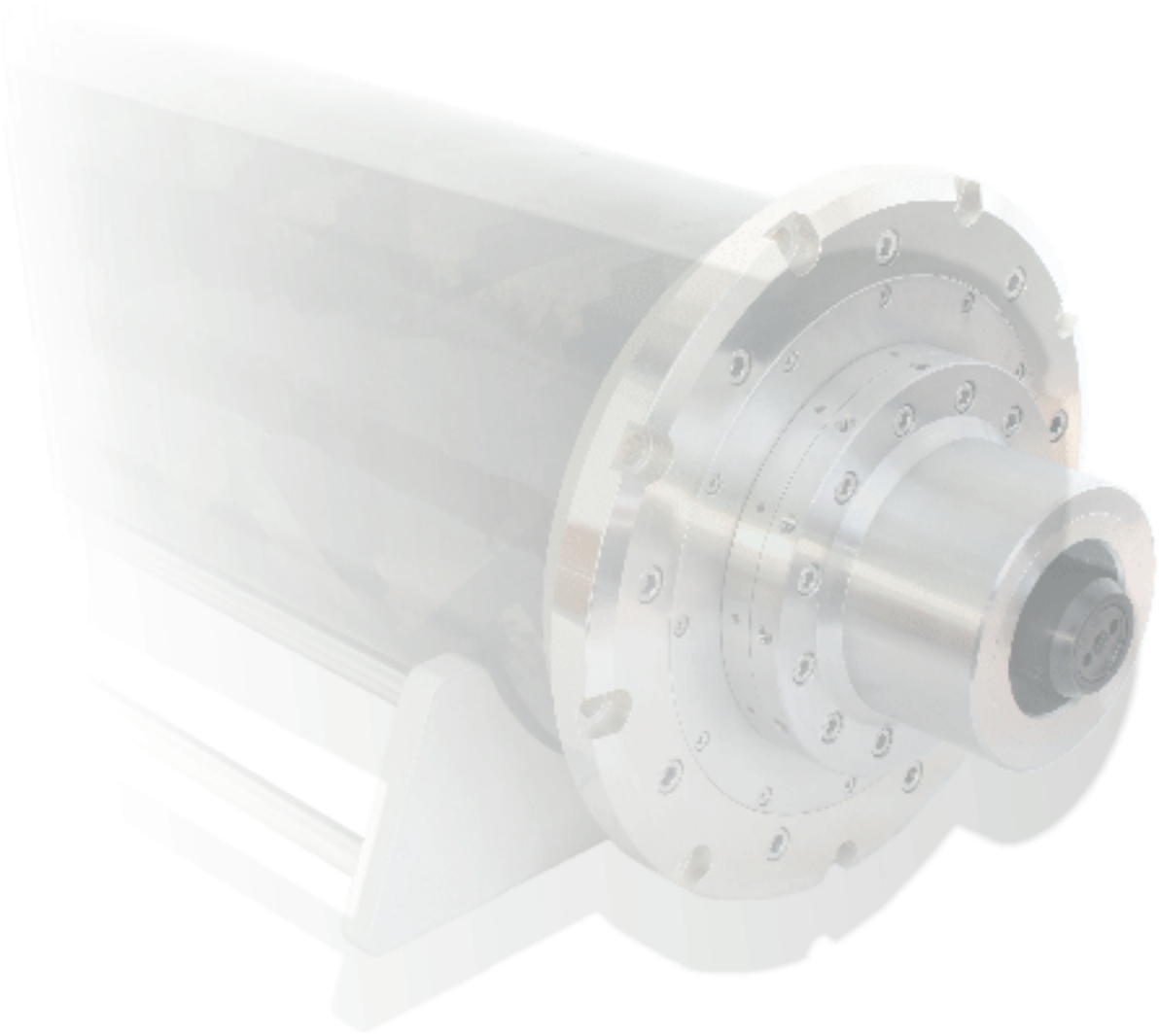

Levicron

Development, manufacture and sales of motor spindle solutions with non-contact bearing technologies for ultra-precision and CNC machining are Levicron's core businesses. At Levicron bespoke analytical proven methods and simulation tools for structural analysis and fluid dynamics complement sound practical experiences in the field of spindle development and production.

Together with the first-ever aerostatic tool spindle comprising an industrial taper interfaces (HSK) and full CNC functionality, products from Levicron now are used to CNC-machine precision parts with optical surface finish all around the world.

Our very own requirements on our products and those from our customers prevent the use of off-the-shelf components. Therefore not only the patented bearing technology and patent-pending spring-free HSK taper clamping systems can be found in our motor spindles, but also in-house developed motor and encoder and tool clamping solutions. A vertical manufacturing integration of more than 90 % incorporates CNC turning, - milling, - diamond machining, - cylindrical /bore grinding, - wire cut EDM and bespoke machining solutions. Along with our production sophisticated test and dynamic balancing methods can all be found under one roof.

The quality, speed and accuracy of Levicron spindles and the requirements coming from the applications they are used for made it necessary to develop bespoke encoder and motor solutions as well as solutions for HSK tool clamping, HSK tool holding and others. Because of their unique performance and functionality some of these solutions have been made available for our customers as off-the-shelf items. Although Levicron had to re-invented the wheel more than once our customers can confirm that our wheels run smoother and faster than others.

As a result, tool and work-holding spindle solutions for turning, milling and grinding can be provided to the customer which provide a unique thermal stability and robustness at shaft dynamics, erros in shaft motion and speeds that have not been available so far.

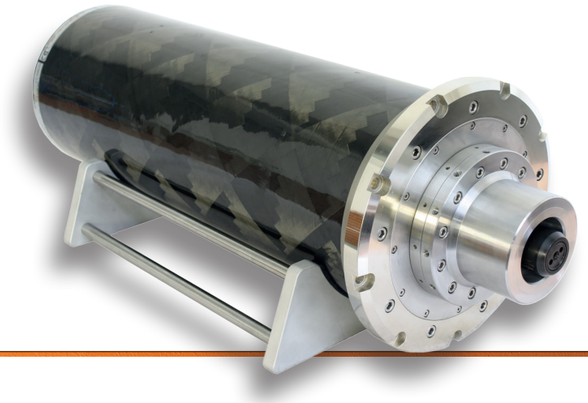

Levicron

All in house developed and manufactured Ultra Precision Technology for CNC Machining

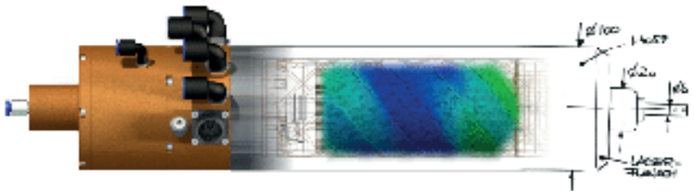

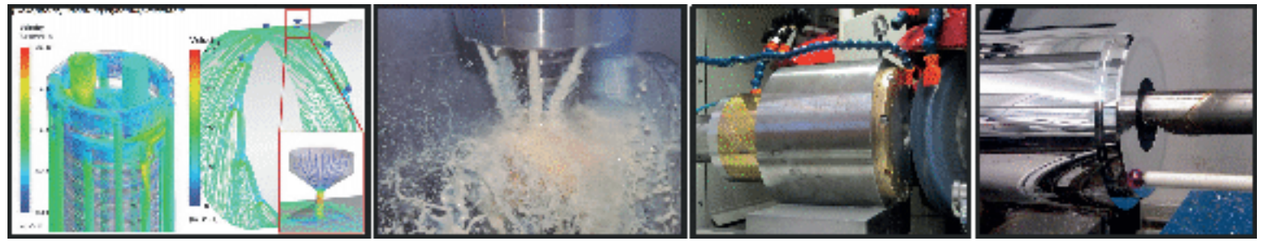

Why aerostatic bearing systems for tool and work-holding spindles?

Although difficult to believe for many engineers, the radial stiffness of our tool and work-holding spindles is indeed comparable with the radial stiffness of actual roller bearing spindles, the axial stiffness can even be higher. Ultra-thin bearing gaps combined with a large bearing surface - compared to the tiny Hertzian contact in roller bearings - lead to a comparable bearing stiffness and in combination with our high-pressure aerostatic bearing technology to even higher load capacities. Also, bearing gaps with only a few microns in width allow very high shear velocities and compensate for shape errors. This averaging effect of the air film between the shaft and the bearing allows a shaft rotation more controlled than the sum of all shape errors would actually allow.

Technical benefits

- Higher speeds: speeds of up to 100,000rpm with HSK-E25 tool holders
- Significantly smaller synchronous and asynchronous spindle errors: dynamic run-out values < 0.5 micron and errors in shaft motion of <30nm at any speed
- Thermal stability: spindle soak time < 5min., axial shaft growth < 5 micron, X/Y stability < 0.5 micron
- Wear-free and stable operation even at top speed
- Modular and service-friendly cartridge design
- Oil and grease-free operation

Customer benefits

- Higher productivity and reduced tool wear
- Remarkably better surface finishes in any material; suitable for ultra-precision machining
- Stable operation at any speed with no time limit
- Cost-effective assembly due to a modular spindle desig
- Oil- and grease-free operation - suitable for medical parts and applications within the food industry

Solutions from Levicron - bespoke solutions to not compromise accuracy and performance:

- Patented bearing technology for outstanding shaft errors in motion, minimized air consumption and spindle stiffness
- Patented automatic and spring-less tool interface for DIN69893 (HSK) taper clamping to give outstanding shaft dynamics and reliability
- Bespoke iron-less motor solutions for ultra-precision machining and high-power motor options with highest power density
- In-house developed integral encoder systems with reduced number of parts and reduced size compared to industry standard
- DIN69893 (HSK) tool holder series UTS-x for ultra-precision machining

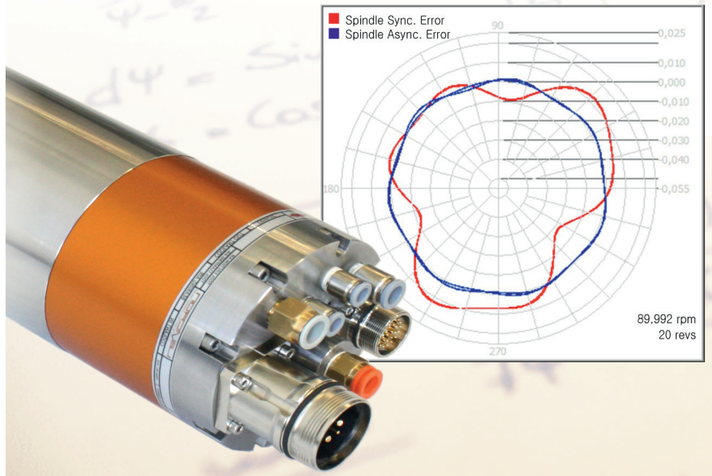

90,000 rpm

Speed:	89,992	rpm
Bandpass Filter.:	1,400 – 16,000	Hz
Orders:	2 – 15	
Spindle Snychronous Error:	22.52	nm
Spindle Anychronous Error:	3.40	nm
Fundamental:	0.42	µm

ASD-Px/ ASD-PH63M at a glance

Speed:	**0 - 10,000 rpm** (12,000 rpm optional)
Radial Load Capacity:	**> 1,800 N**
Radial Stiffness:	**> 2,200 N**
Axial Stiffness:	**> 180 N/ µm**
Motor Type:	**> 270 N/ µm**
Motor Torque:	**Iron-less synchronous**
Angular Accuracy:	**6.5 Nm** *(S1, 100%) (14 Nm optional)*
Error in Motion:	**< 5 “**
	< 15 nm

at 6 bar gauge pressure

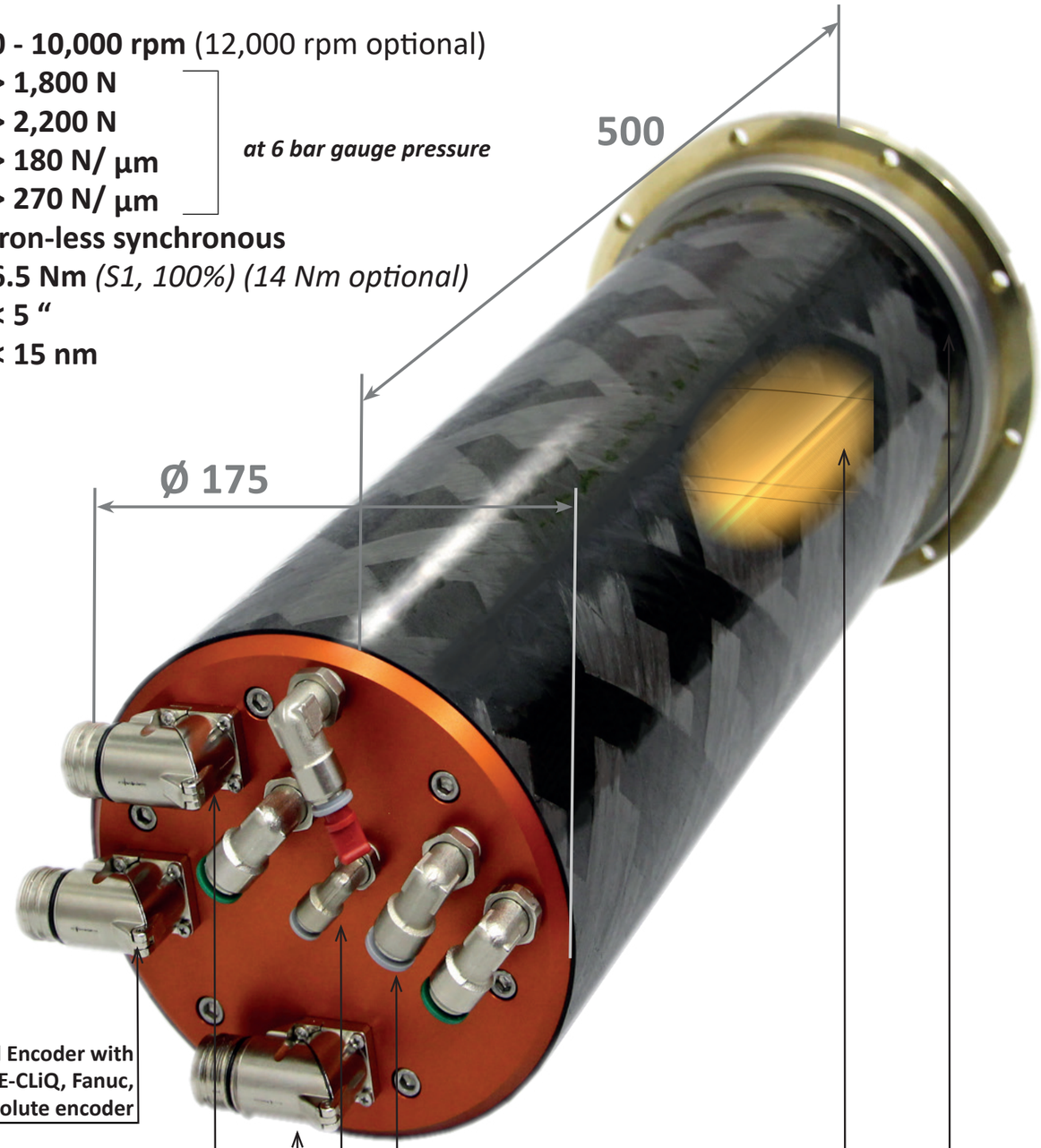

Patented bearing Technology

Work-holding optins:
- Face plate
- Vacuum Chuck
- Zero-point clamping chuck
- **HSK-C63 (manual)**

High-Resolution 1 VSS Optical Encoder with 11,840 lines or 26bit BISS-C, DRIVE-CLiQ, Fanuc, Panasonic comp. absolute encoder

1 VSS GMR Encoder with 253 lines

Ultra-low vibration iron-less synchronous motor technology with 6.5 Nm torque (S1), optional with 14 Nm (S1) High-Torque Motor

Rotary feedthrough vacuum/ air (also coolant with HSK63 option)

High-efficiency thin-film liquid cooling

Cartridge Design for closed head stocks, optional with liquid cooled bolt-on spindle mount

ASD-Px/ ASD-PH63M

Ultra-precision work-holding motor spindle and axis with optional HSK-C63 tool interface.

Description

With a shaft error in motion of under 15 nm, the highest stiffness and load capacity for an aerostatic work-holding spindle our ASD-Px combines Ultra-Precision with speed and robustness for machining and positioning of optics, optical components or any other parts that require Ultra-Precision Machining. The high-resolution encoder options and the iron-less motor technology further gives excellent performance in slow-tool applications.
A spindle soak time of under 9 minutes (cold and standstill to 10 krpm) and a thermal shaft growth of less than 0.8 micron are achieved by a strictly symmetrical design combined with our efficient thin-film liquid spindle cooling technology.
The cartridge design with axial spindle connectors allows its use in horizontal as well as vertical machining centres with closed spindle stocks. The “High-Torque” motor option gives 14 Nm motor torque (S1) and allows machining with large grinding wheels. Grinding large glass lenses with our ASD-Px or ASD-PH63 significantly lowers the sub-surface damage and the following polishing process.

*W*hat is the added value?

As a result the user gets an ultra-precision work-holding spindle for the manufacture and positioning of optical components, no matter if it’s for machining very large metal mirrors at low speeds or lenslet arrays at higher speeds. The optional HSK-C63 tool interface further allows its use as a ultra-precision tool spindle for grinding applications to create high-precision optics or wafer.

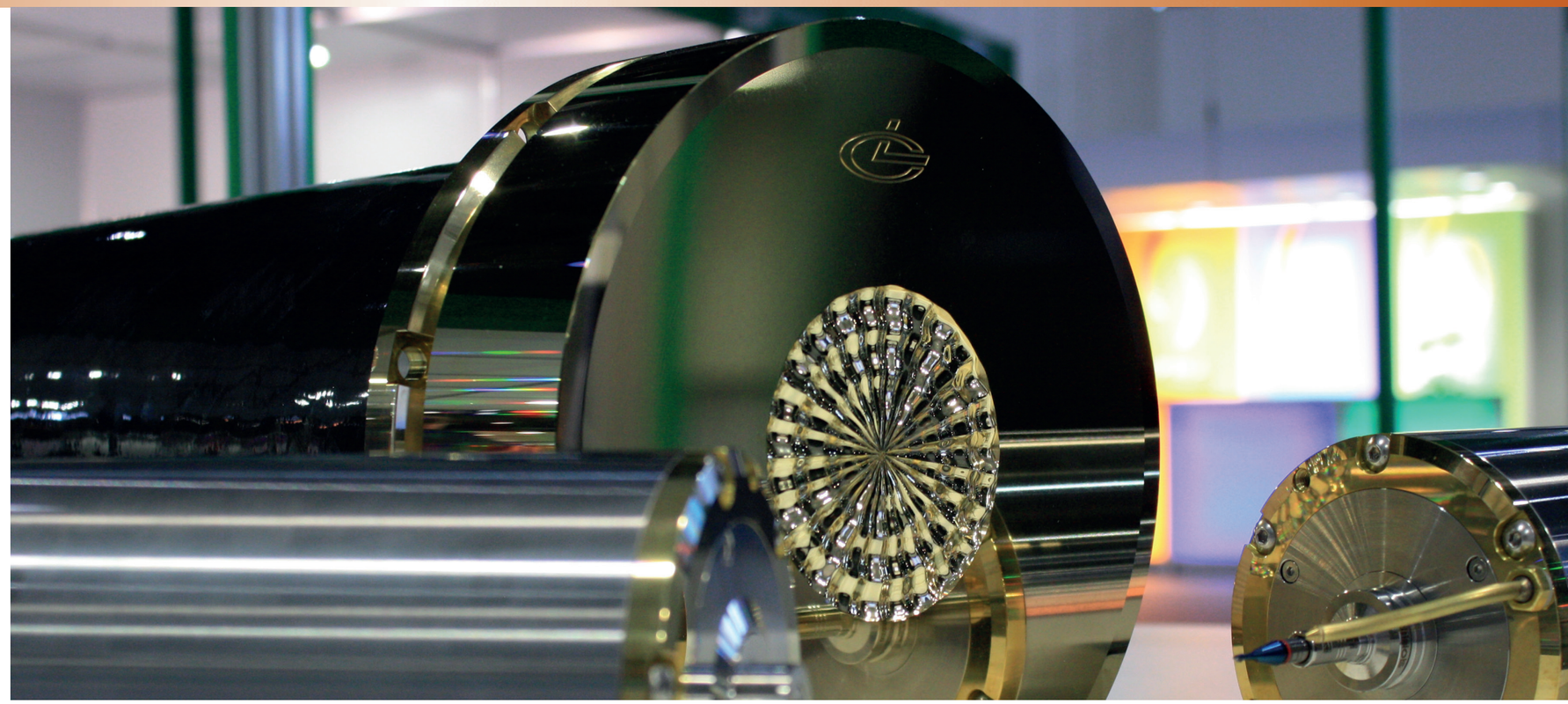

ASD-Px/ PH63M, Multi-probe Error-Motion measurement with error-separation

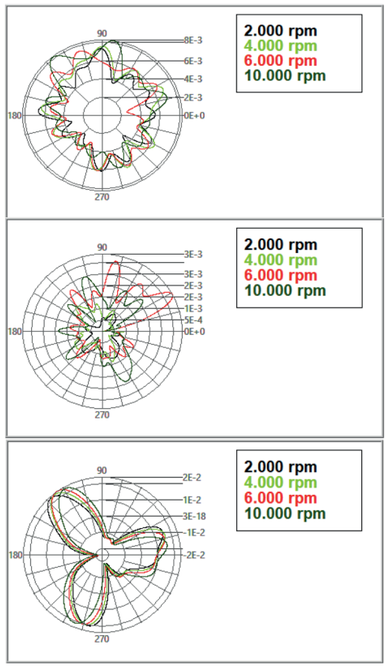

To verify the quality and precision of our spindles Levicron has developed its own error-motion testing rig, data acquisition and software. Multi-probe techniques and capacitive gauges with nanometer resolution at scanning frequencies above 100 khz allow measurements of synchronous and asynchronous shaft errors in motion at a nanometer level. Where for asynchronous shaft errors in motion electrical interferences are the most critical influence, it is the separation of the spindle error from the target shape error for the synchronous shaft errors in motion. With Levicron‘s multi-probe technique, all of these errors can be reliably measured in one set up to make sure our customers get a spindle quality in the specified range.

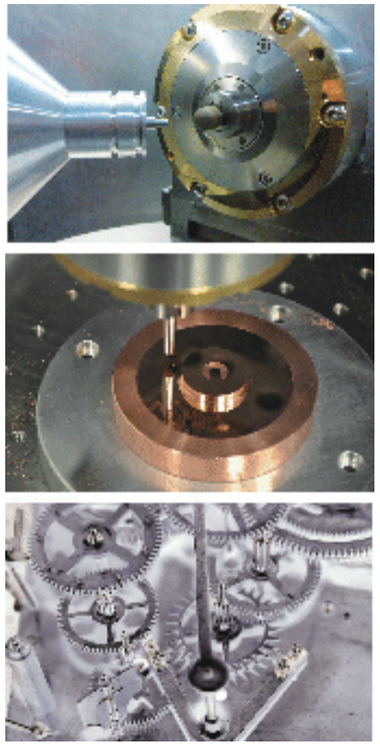

ASD-Px / ASD-PH63M, spindle soak time and axial shaft growth

The design of Levicron‘s ASD-Px spindle series not only targets on lowest possible shaft errors in motion, but also on dynamic and thermal stability. The spindle design compensates for thermal shaft growth and uses Levicron‘s thin-film technology for its cooling. The large cooling surface and high coolant velocity results in a spindle soak-time of under 9 minutes as well as a shaft growth of better 0.8 micron, measured from standstill and 20 °C to 10,000 rpm and warmed through.

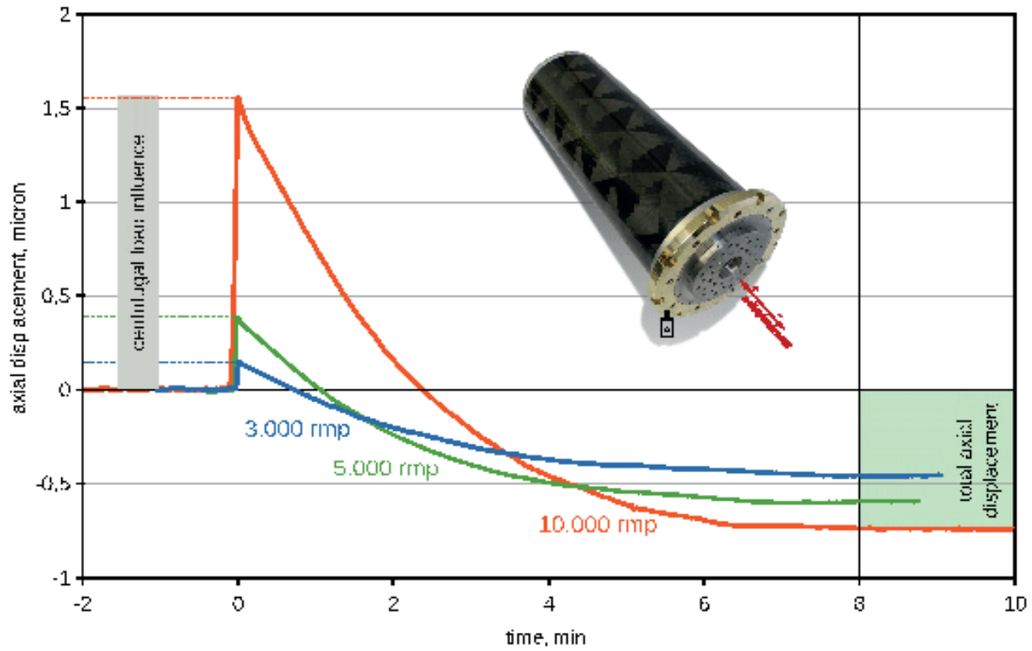

Levicron GmbH | Clara-Immerwahr-Str. 2
67661 Kaiserslautern, Germany
Phone: +49 (0) 6301 - 66800 - 0 | https://levicron.com | E-Mail: infolevicron.com